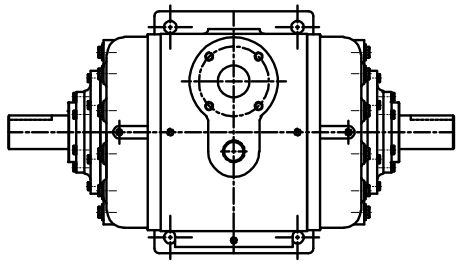

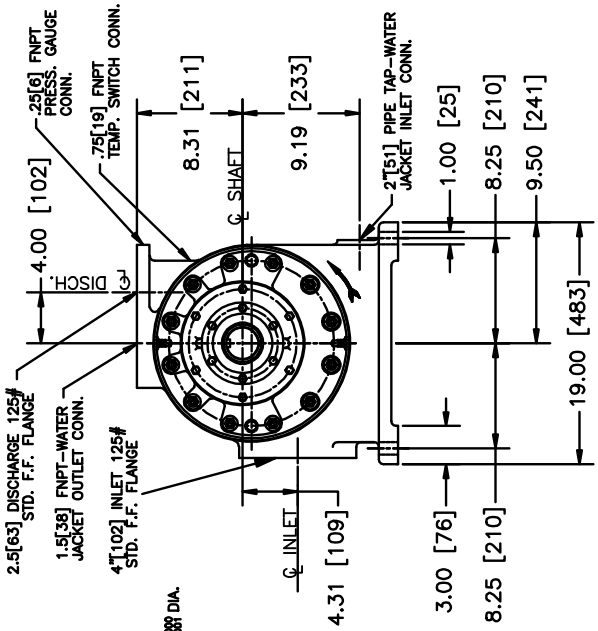

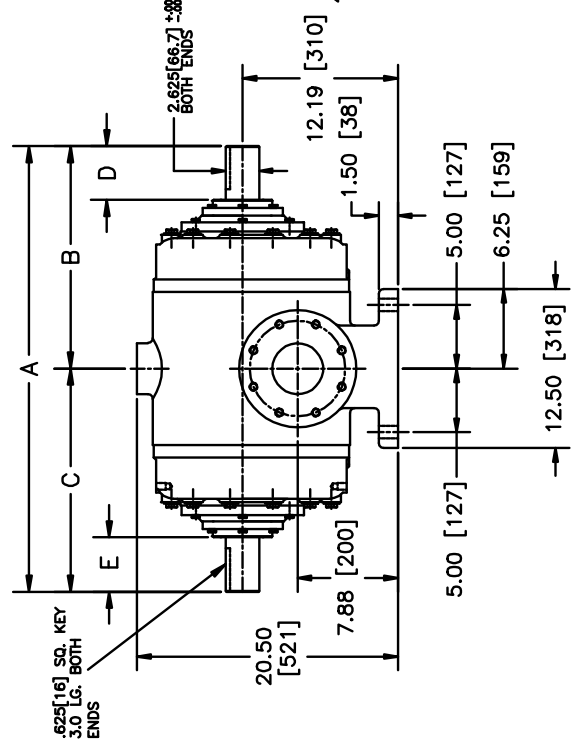

ALL DIMENSIONS ARE IN INCHES[mm] AND SUBJECT TO CHANGE WITHOUT PRIOR NOTICE.

	A	B	C	D	E	WEIGHT
CRANE SEAL	40.50[1029]	20.25[514]	20.25[514]	4.50[114]	4.50[114]	870[394kg]
MECHANICAL SEAL	35.00[889]	17.50[445]	17.50[445]	3.53[90]	3.53[90]	860[390kg]

01	5-24-71	MJS	MJS
REDRAWN			
02	12-12-91	PTB	PTB
NEW BORDER & TABLE			
03	02-10-98	THS	RJP
CHGD MECH. DIM DCN 98548			
04	06/30/03	JLR	RJP

Ro-Flo Compressors

© Ro-Flo Compressors, LLC
Confidentiality Notice:
This drawing contains confidential information of Ro-Flo Compressors, LLC
It may not be shared with third parties or used, copied or distributed in any manner without the express written permission

THIRD ANGLE PROJECTION

DO NOT SCALE CAD GENERATED DRAWING DO NOT MANUALLY UPDATE.

BREAK ALL SHARP CORNERS AND REMOVE BURRS UNLESS OTHERWISE SPECIFIED. STAMP OR ETCH PART IDENTIFICATION IN AREA MARKED ☒

SIMILAR TO MK.–

FILE NO. NONE

DR	MJS	5-24-71
CK	MJS	5-24-71
AP	MJS	5-24-71

NONE MACHINED SURFACE TEXTURE

WGT. R – F –

ANGULAR TOLERANCE ±

UNLESS OTHERWISE SPECIFIED
1-PLACE DEC.±.060
2-PLACE DEC.±.030
3-PLACE DEC.±.010

NAME STANDARD DIMENSIONS 210M RO-FLO

MAT'L DOUBLE EXTENSION SHAFT

SCALE	SHEET	PART NO	ISSUE
1:11.5	1/1	16-123-618-402	04