ALL DIMENSIONS ARE IN INCHES[mm] AND SUBJECT TO CHANGE WITHOUT PRIOR NOTICE.

WEIGHT (APPROX)
10G RO-FLO 1350#[612 kg]

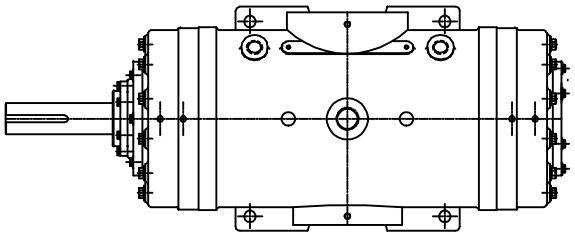

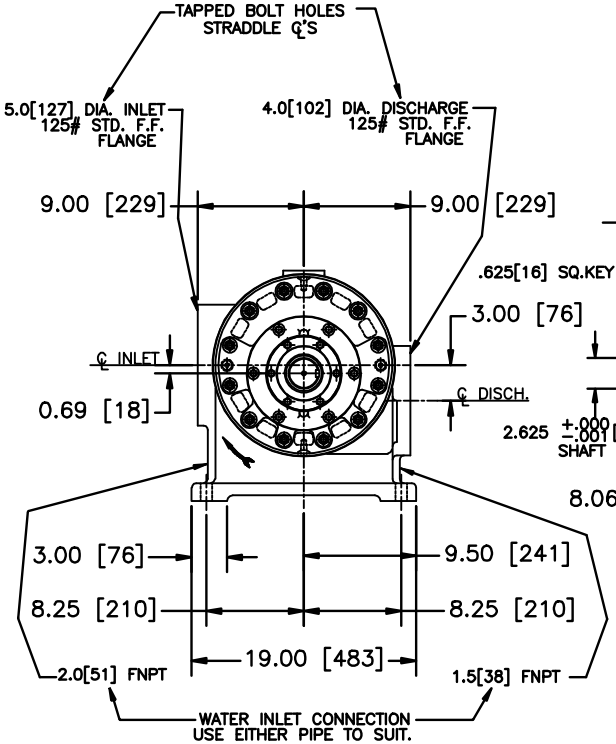

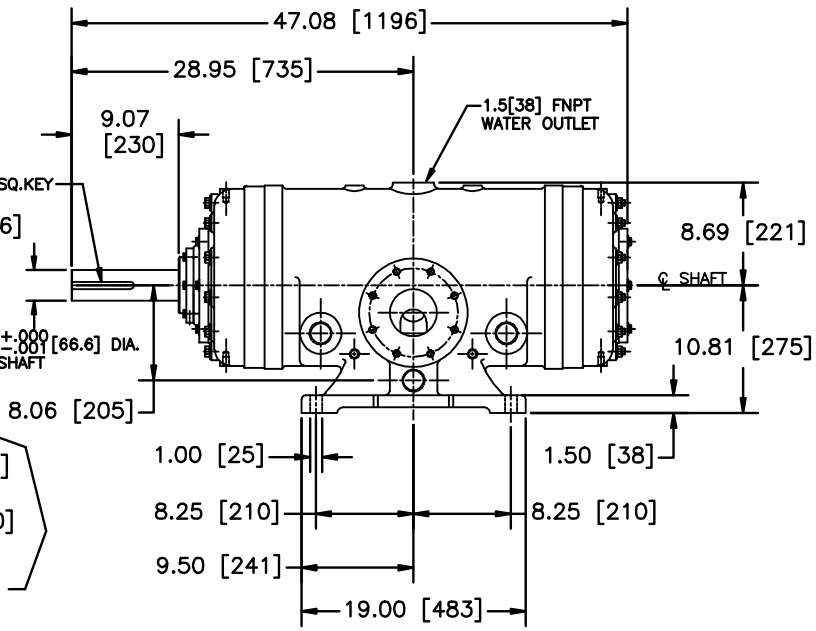

01	2-3-77	MJS	MJS
02	5-22-91	PTB	PTB
REDRAWN			
03	12-26-91	PTB	PTB
NEW BORDER			
04	01-07-98	THS	RJP
CHGD MECH.SEAL DIM. DCN 98548			
05	06/30/03	JLR	RJP

Ro-Flo Compressors

© Ro-Flo Compressors, LLC
Confidentiality Notice:
This drawing contains confidential information of Ro-Flo Compressors, LLC
It may not be shared with third parties or used, copied or distributed in any manner without express written permission

THIRD ANGLE PROJECTION

DO NOT SCALE CAD GENERATED DRAWING DO NOT MANUALLY UPDATE.

BREAK ALL SHARP CORNERS AND REMOVE BURRS UNLESS OTHERWISE SPECIFIED. STAMP OR ETCH PART IDENTIFICATION IN AREA MARKED

SIMILAR TO MK.-

FILE NO. NONE

DR MJS 2-3-77
CK MJS 2-3-77
AP MJS 2-3-77

MACHINED SURFACE TEXTURE

NAME

WGT. R - F -

ANGULAR TOLERANCE ±

UNLESS OTHERWISE SPECIFIED
1-PLACE DEC.±.060
2-PLACE DEC.±.030
3-PLACE DEC.±.010

STANDARD DIMENSIONS FOR 10G RO-FLO RIGHT HAND

MAT'L

SCALE NONE

SHEET 1/1

PART NO 16-123-633-405

ISSUE 05