ALL DIMENSIONS ARE IN INCHES[mm] AND SUBJECT TO CHANGE WITHOUT PRIOR NOTICE.

WEIGHT (APPROX)
8DE RO-FLO 780#[354 kg]

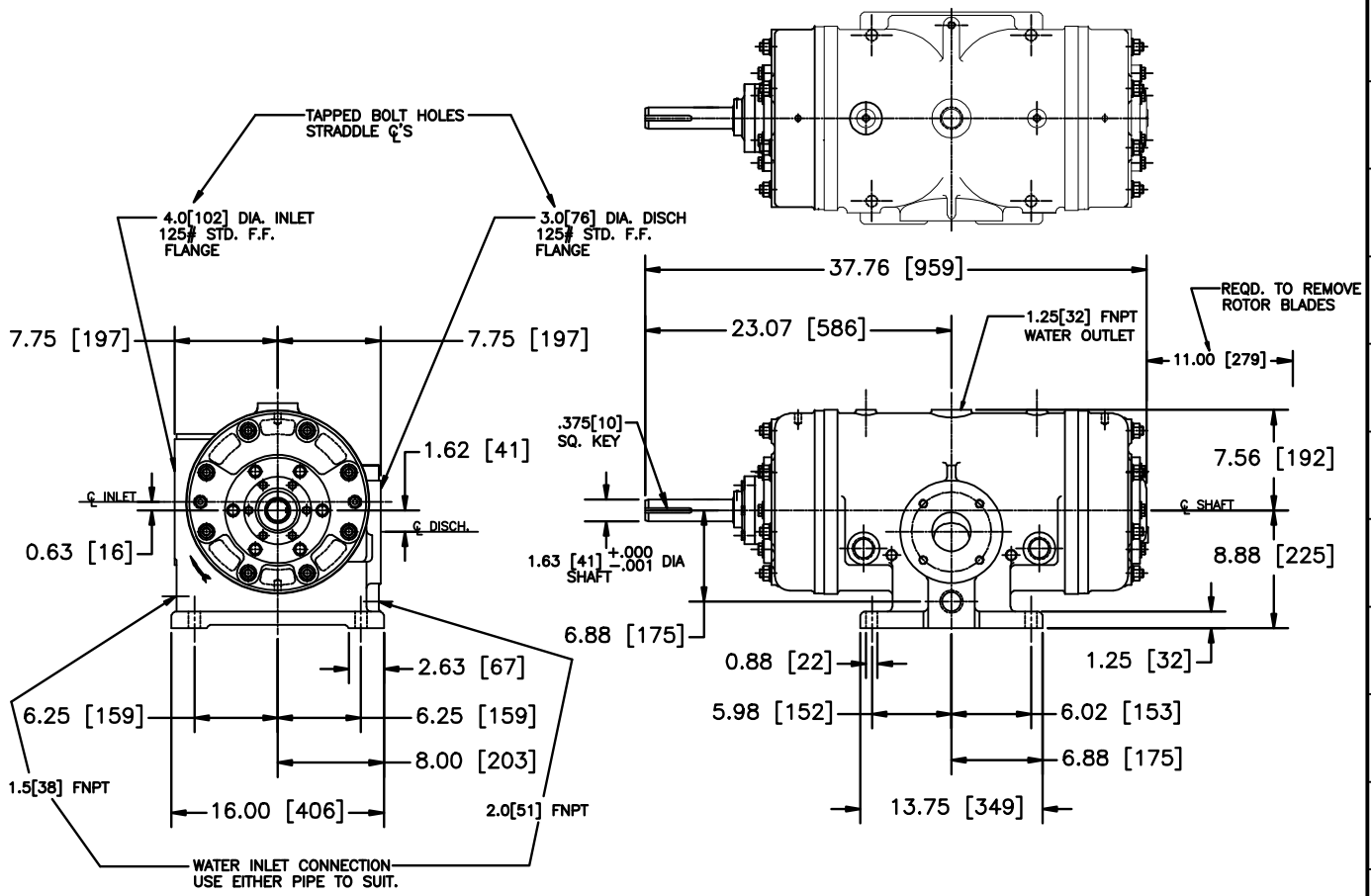

01	2-3-77	MJS	MJS
02	5-23-91	PTB	PTB
	REDRAWN		
03	1-8-92	PTB	PTB
	REDRAWN		
	NEW BORDER		
04	01-07-98	THS	RJP
	CHGD MECH.SEAL DIM.		
	DCN 98548		
05	06/30/03	JLR	RJP

Ro-Flo Compressors

© Ro-Flo Compressors, LLC
Confidentiality Notice: This drawing contains confidential information of Ro-Flo Compressors, LLC. It may not be shared with third parties or used, copied or distributed in any manner without the express written permission

THIRD ANGLE PROJECTION

DO NOT SCALE CAD GENERATED DRAWING DO NOT MANUALLY UPDATE.

BREAK ALL SHARP CORNERS AND REMOVE BURRS UNLESS OTHERWISE SPECIFIED. STAMP OR ETCH PART IDENTIFICATION IN AREA MARKED

SIMILAR TO MK.–

FILE NO. NONE

DR	MJS	2-3-77
CK	MJS	2-3-77
AP	MJS	2-3-77

MACHINED SURFACE TEXTURE

WGT. R – F –

ANGULAR TOLERANCE ±

UNLESS OTHERWISE SPECIFIED
1-PLACE DEC.±.060
2-PLACE DEC.±.030
3-PLACE DEC.±.010

NAME

STANDARD DIMENSIONS FOR 8DE RO-FLO RIGHT HAND

MAT'L

SCALE	SHEET	PART NO	ISSUE
NONE	1/1	16-123-633-404	05