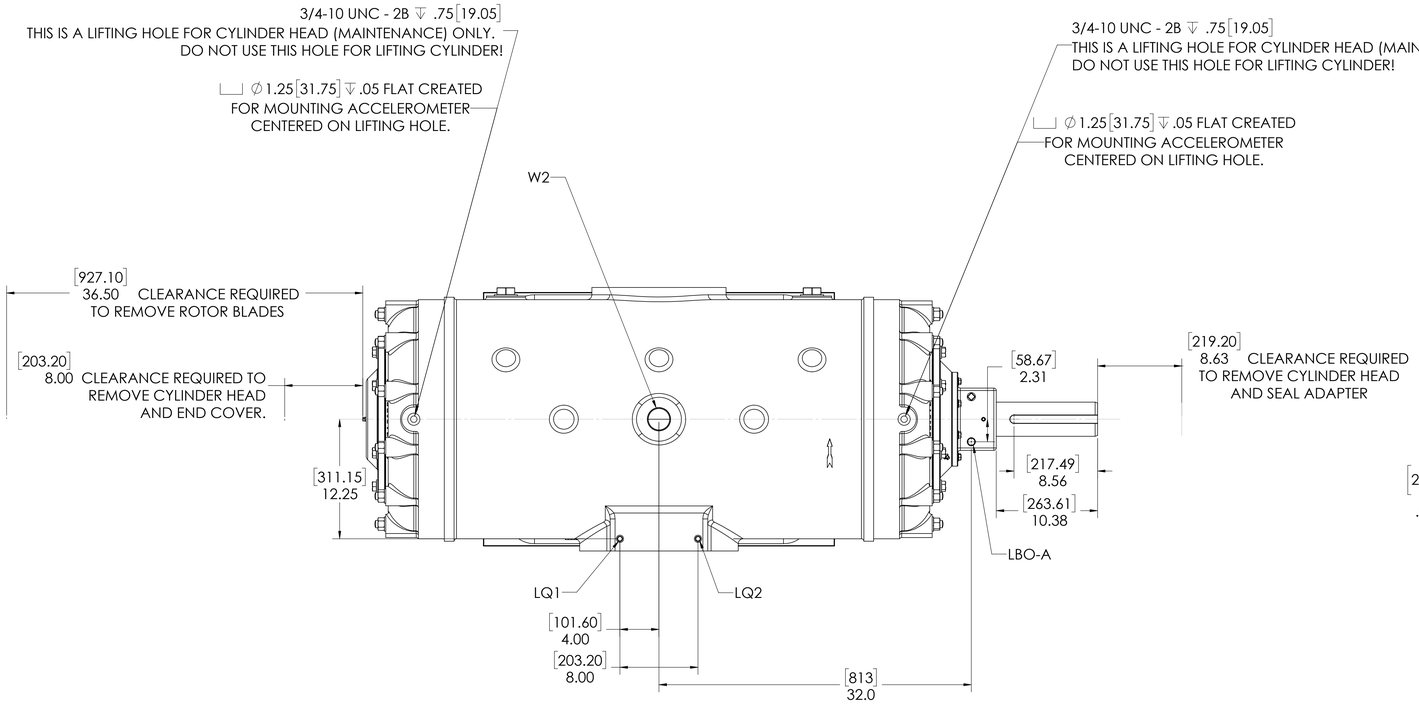

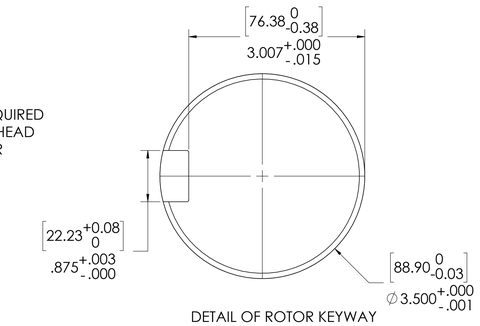

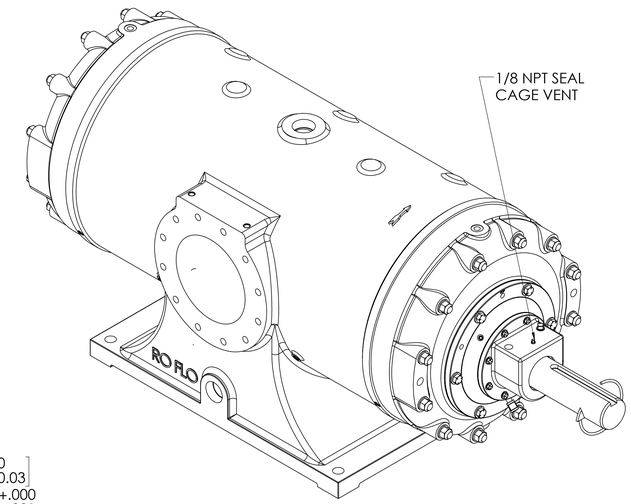

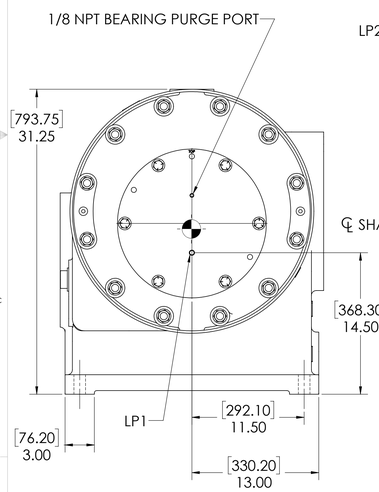

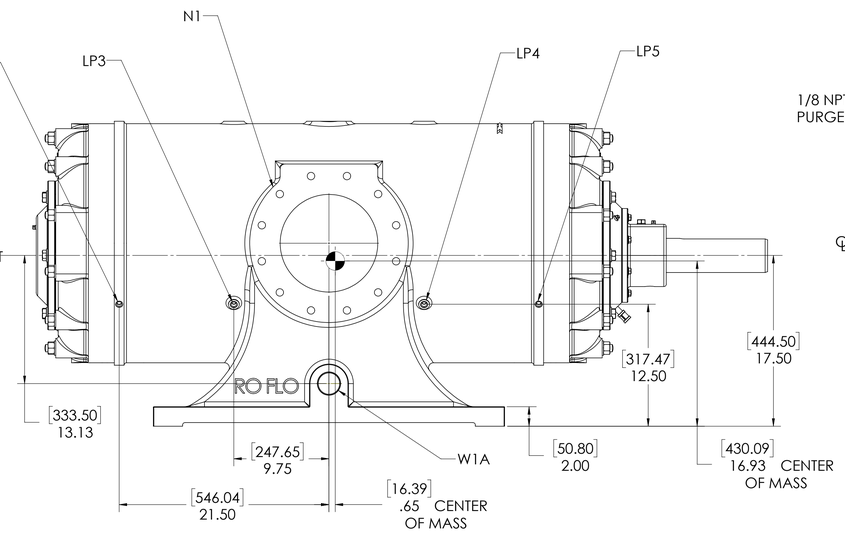

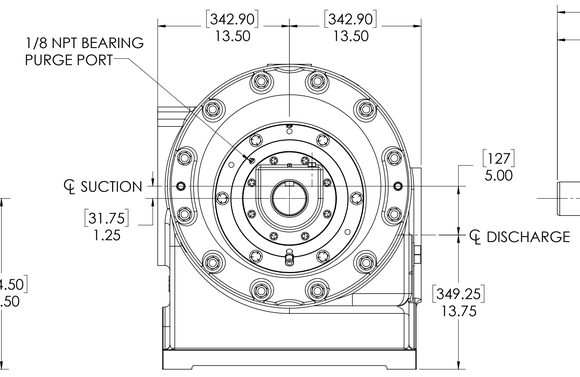

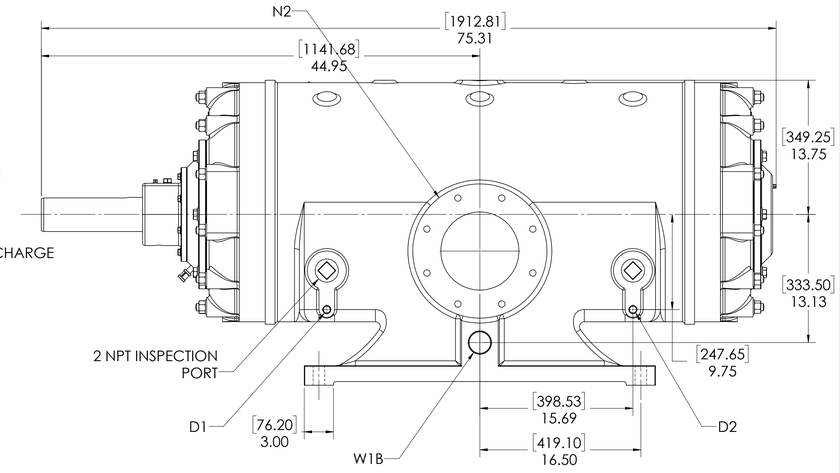

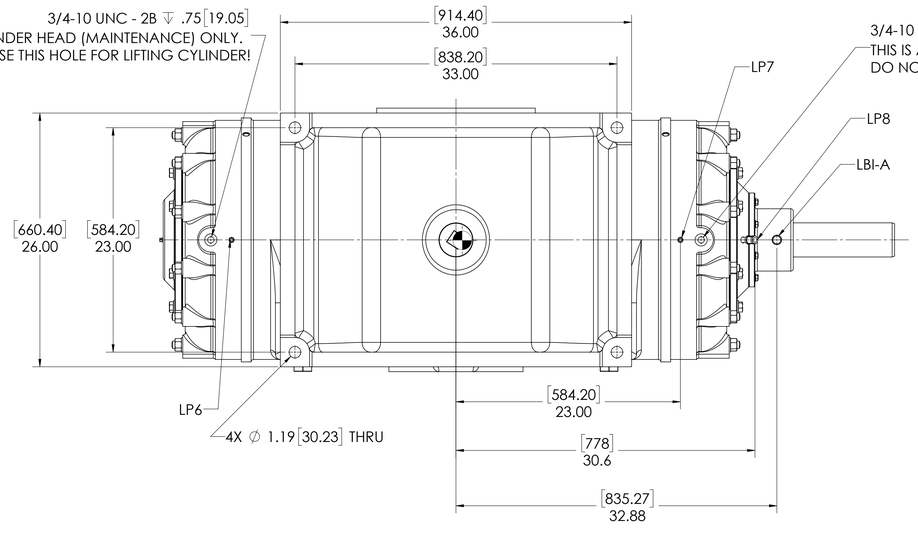

OIL CONNECTION POINTS SUMMARY		
(REFER TO MANUAL FOR FURTHER INFORMATION)		
DESCRIPTION	**THREAD SIZE**	**QTY**
LUBE QUILL(LQx)	1/4 NPT (F)	2
LUBE POINTS(LPx)	1/4 NPT (F)	8
SEAL SUPPLY (LBI-A)	1/2 NPT (F)	1
SEAL RETURN (LBO-A)	1/2 NPT (F)	1

NOTES:

1. ⊕ CENTER OF MASS DIMENSIONS ARE APPROXIMATE
2. EITHER WATER INLET MAY BE USED, DEPENDING UPON SYSTEM NEEDS
3. WEIGHT IS APPROXIMATE
4. THIS DRAWING IS DUAL DIMENSION. DIMENSIONS ARE IN INCHES, DIMENSIONS IN [BRACKETS] ARE IN MILLIMETERS.

	FLANGE CONNECTIONS	BOLT HOLE SIZE
N1	10" GAS SUCTION FLANGE (ANSI CLASS 150 FLAT FACE)	12 x 7/8-9 ↧ 1.38
N2	8" GAS DISCHARGE FLANGE (ANSI CLASS 150 FLAT FACE)	8 x 3/4-10 ↧ 1.12
W1A	2 NPT(F) WATER INLET (SEE NOTE 2)	N/A
W1B	2 NPT(F) WATER INLET (SEE NOTE 2)	N/A
W2	2 NPT(F) WATER OUTLET	N/A
D1	1/2 NPT(F) DRAIN HOLE	N/A
D2	1/2 NPT(F) DRAIN HOLE	N/A

UNLESS OTHERWISE SPECIFIED:
DIMENSIONS ARE IN INCHES
TOLERANCES:
ANGULAR: MACH ± 5 DEG
ONE PLACE DECIMAL ± .060
TWO PLACE DECIMAL ± .030
THREE PLACE DECIMAL ± .015
INTERPRET GEOMETRIC
TOLERANCING PER: ANSI
MATERIAL
FINISH(UNLESS OTHERWISE NOTED)

	NAME	DATE
DRAWN	TRF	1/13/2020
CHECKED	TRF	1/13/2020
ENG APPR	TRF	1/13/2020

PROPRIETARY AND CONFIDENTIAL
THE INFORMATION CONTAINED IN THIS DRAWING IS THE SOLE PROPERTY OF RO-FLO COMPRESSORS,LLC. ANY REPRODUCTION IN PART OR AS A WHOLE WITHOUT THE WRITTEN PERMISSION OF RO-FLO COMPRESSORS, LLC. IS PROHIBITED.

Ro-Flo Compressors, LLC

TITLE: GENERAL ARRANGEMENT, 19S, CW, DBS

SIZE E | PART NO. 16-123-633-412 | REV 12

SCALE 1:6 | WEIGHT 5100 LBS | SHEET 1 of 1

16-123-633-412 REV 12