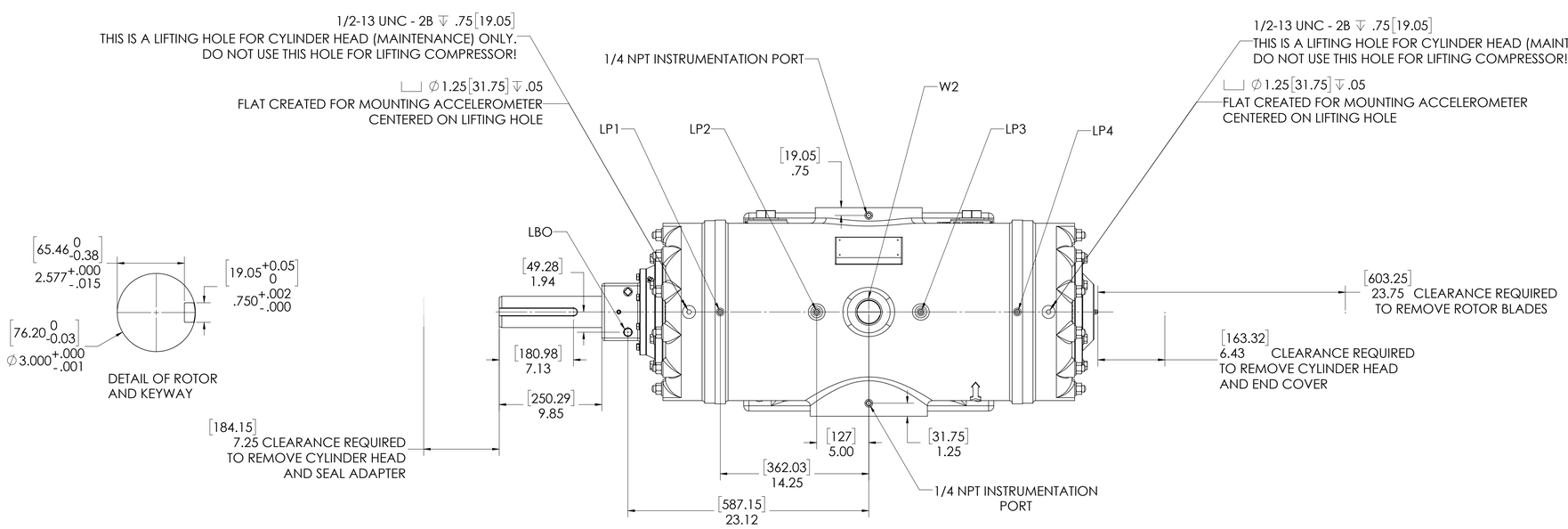

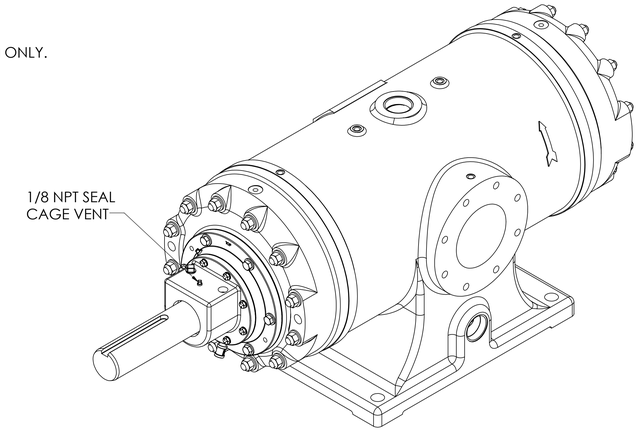

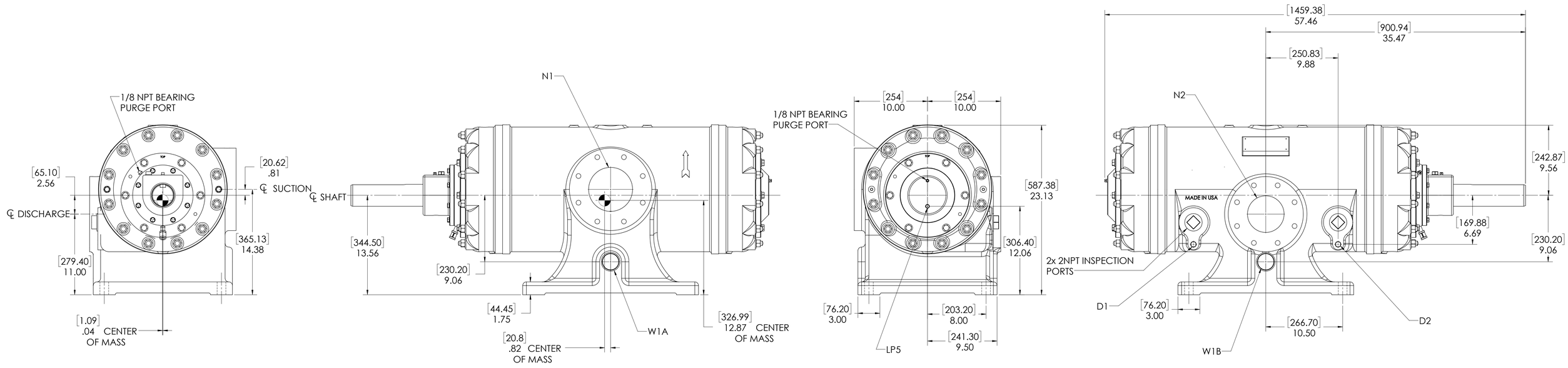

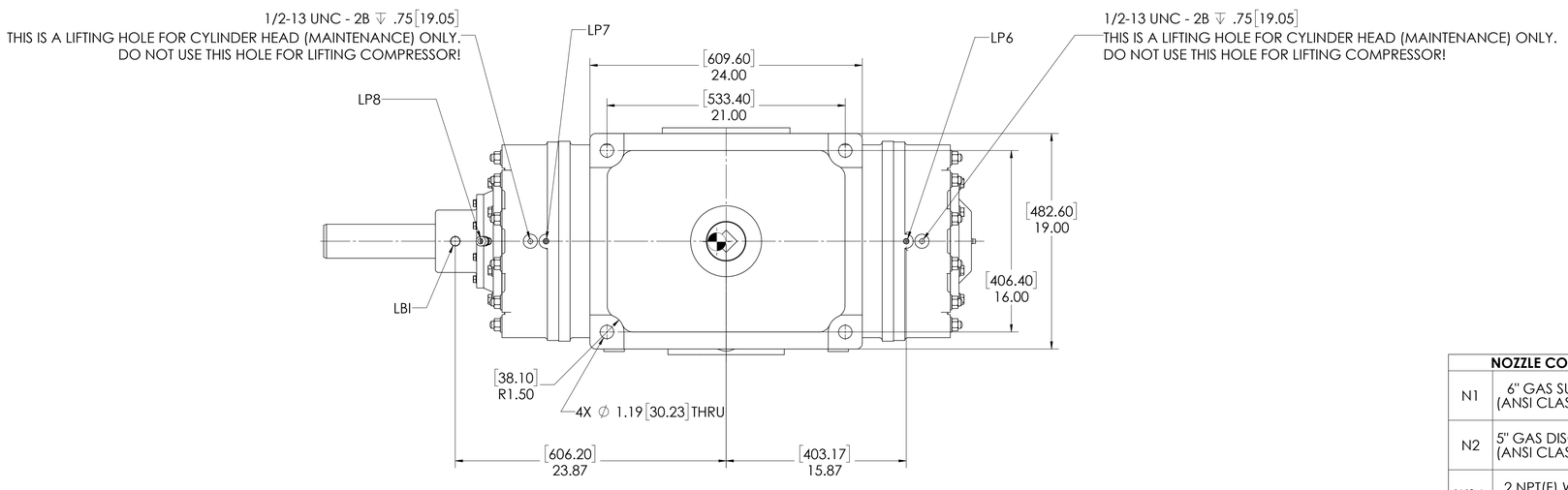

OIL CONNECTION POINTS SUMMARY		
(REFER TO MANUAL FOR FURTHER INFORMATION)		
DESCRIPTION	**THREAD SIZE**	**QTY**
LUBE QUILL(LQx)	1/4 NPT (F)	NONE
LUBE POINTS(LPx)	1/4 NPT (F)	8
SEAL SUPPLY (LBI)	1/2 NPT-(F)	1
SEAL RETURN (LBO)	1/2 NPT-(F)	1

	NOZZLE CONNECTIONS	BOLT HOLE SIZE
N1	6" GAS SUCTION FLANGE (ANSI CLASS 150 FLAT FACE)	8 x 3/4-10 ↧ 1.12
N2	5" GAS DISCHARGE FLANGE (ANSI CLASS 150 FLAT FACE)	8 x 3/4-10 ↧ 1.12
W1A	2 NPT(F) WATER INLET (SEE NOTE 2)	N/A
W1B	2 NPT(F) WATER INLET (SEE NOTE 2)	N/A
W2	2 NPT(F) WATER OUTLET	N/A
D2	1/2 NPT DRAIN HOLE	N/A
D1	1/2 NPT DRAIN HOLE	N/A

NOTES:

1. ⌖ CENTER OF MASS DIMENSIONS ARE APPROXIMATE
2. EITHER WATER INLET MAY BE USED, DEPENDING UPON SYSTEM NEEDS
3. WEIGHT IS APPROXIMATE
4. DRAWING IS DUAL DIMENSIONED IN INCHES AND [MM]

UNLESS OTHERWISE SPECIFIED:
DIMENSIONS ARE IN INCHES
TOLERANCES:
ANGULAR: MACH ± .5 DEG
ONE PLACE DECIMAL ± .060
TWO PLACE DECIMAL ± .030
THREE PLACE DECIMAL ± .010
INTERPRET GEOMETRIC TOLERANCING PER: ANSI
MATERIAL
FINISH (UNLESS OTHERWISE NOTED)

	NAME	DATE
DRAWN	TRF	12/30/2019
CHECKED	TRF	12/30/2019
ENG APPR.	TRF	12/30/2019

PROPRIETARY AND CONFIDENTIAL
THE INFORMATION CONTAINED IN THIS DRAWING IS THE SOLE PROPERTY OF RO-FLO COMPRESSORS,LLC. ANY REPRODUCTION IN PART OR AS A WHOLE WITHOUT THE WRITTEN PERMISSION OF RO-FLO COMPRESSORS, LLC. IS PROHIBITED.

Ro-Flo Compressors, LLC

TITLE: GENERAL ARRANGEMENT, 11S, DBS, CCW

SIZE: E | PART NO.: 16-123-633-426 | REV: 07

SCALE: 1:5 | WEIGHT: 2000LBS. | SHEET: 1 OF 1

E 16-123-633-426 07