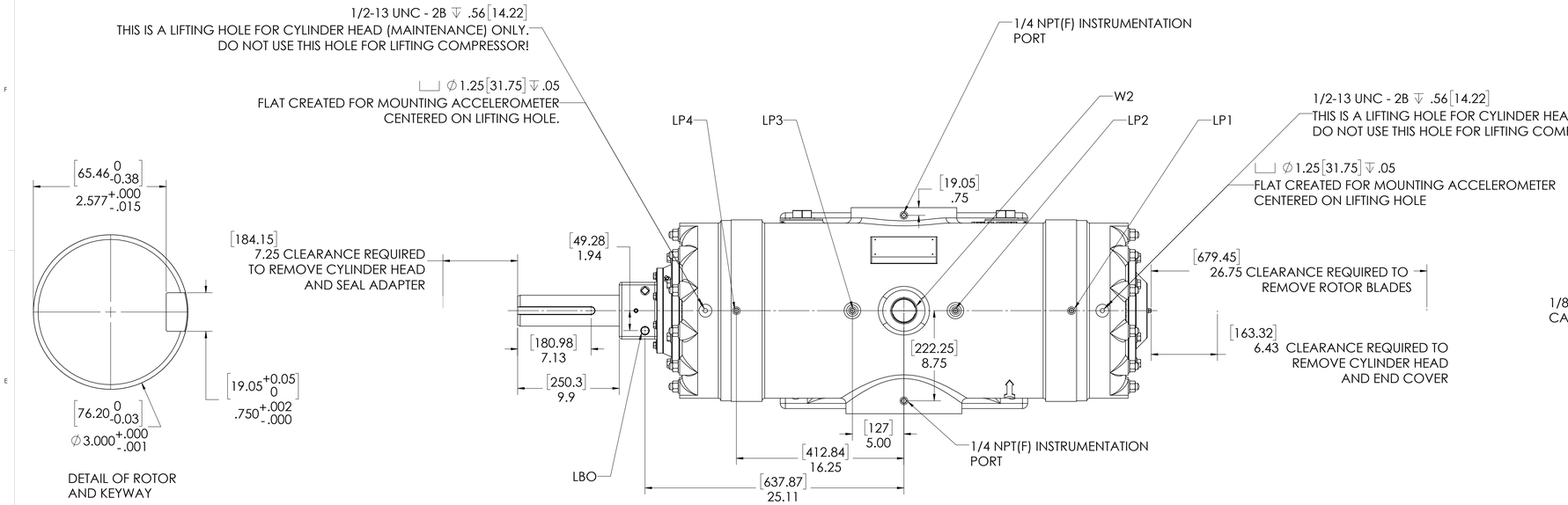

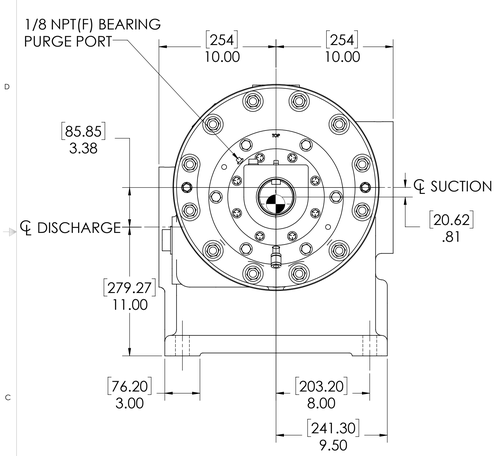

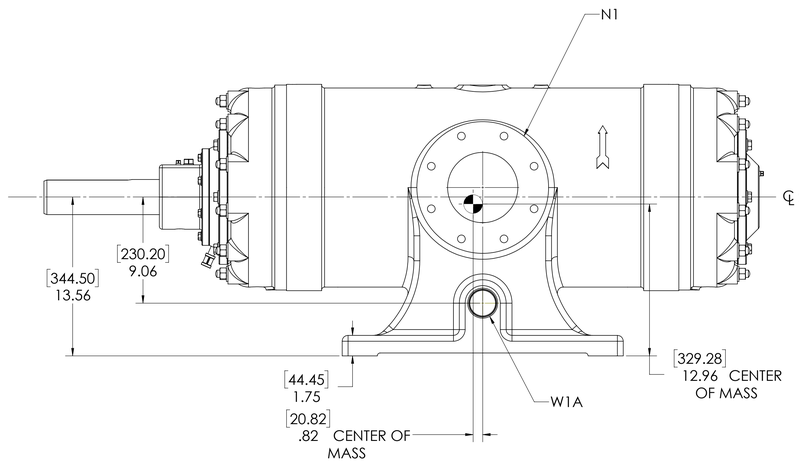

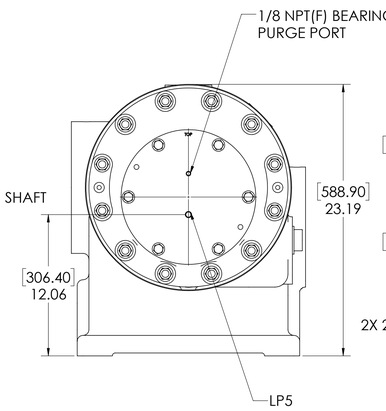

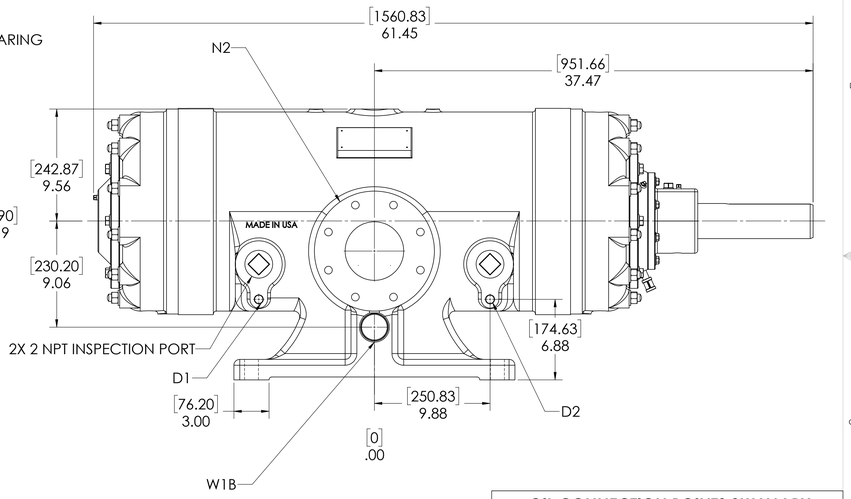

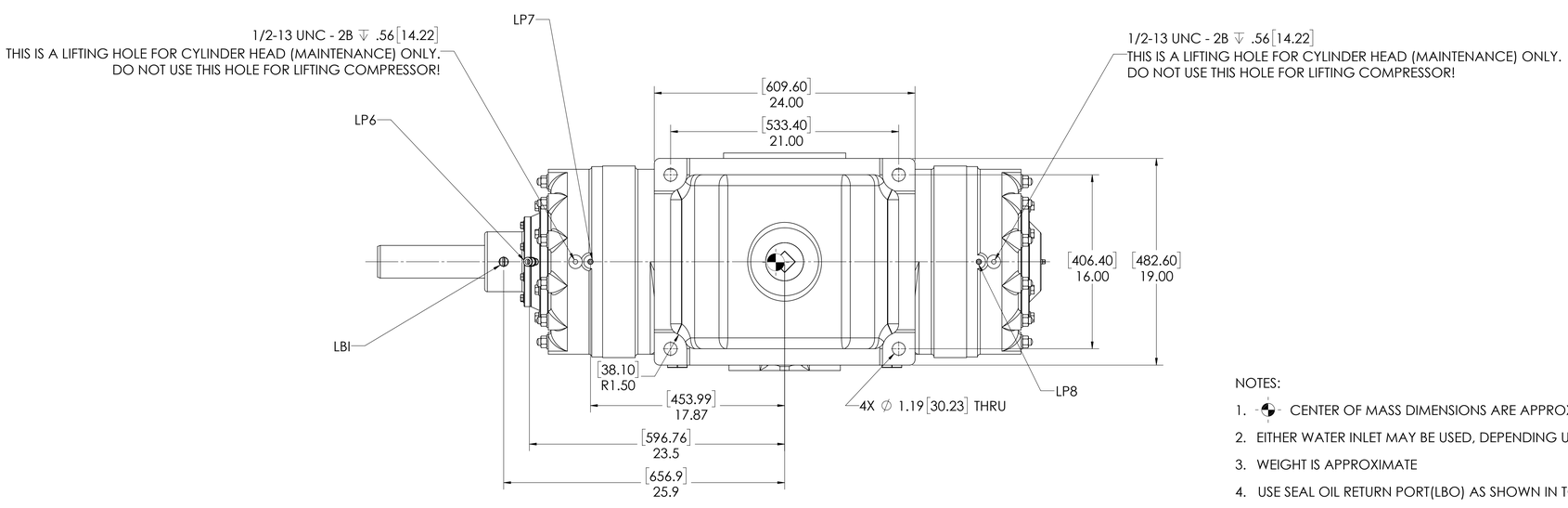

OIL CONNECTION POINTS SUMMARY		
(REFER TO MANUAL FOR FURTHER INFORMATION)		
DESCRIPTION	**THREAD SIZE**	**QTY**
LUBE QUILL(LQx)	1/4 NPT (F)	NONE
LUBE POINTS(LPx)	1/4 NPT (F)	8
SEAL SUPPLY (LBI)	1/2 NPT (F)	1
SEAL RETURN (LBO)	1/2 NPT (F)	1

	NOZZLE CONNECTIONS	BOLT HOLE SIZE
N1	6" GAS SUCTION FLANGE (ANSI CLASS 150 FLAT FACE)	8 x 3/4-10 ↧ 1.12
N2	5" GAS DISCHARGE FLANGE (ANSI CLASS 150 FLAT FACE)	8 x 3/4-10 ↧ 1.12
W1A	2 NPT(F) WATER INLET (SEE NOTE 2)	N/A
W1B	2 NPT(F) WATER INLET (SEE NOTE 2)	N/A
W2	2 NPT(F) WATER OUTLET	N/A
D2	1/2 NPT(F) DRAIN HOLE	N/A
D1	1/2 NPT(F) DRAIN HOLE	N/A

NOTES:

1. ⌖ CENTER OF MASS DIMENSIONS ARE APPROXIMATE
2. EITHER WATER INLET MAY BE USED, DEPENDING UPON SYSTEM NEEDS
3. WEIGHT IS APPROXIMATE
4. USE SEAL OIL RETURN PORT(LBO) AS SHOWN IN TOP VIEW
5. THIS DRAWING IS DUAL DIMENSION. DIMENSIONS WITHOUT BRACKETS ARE IN INCHES, DIMENSIONS IN [BRACKETS] ARE IN MILLIMETERS.

UNLESS OTHERWISE SPECIFIED:
DIMENSIONS ARE IN INCHES
TOLERANCES:
ANGULAR: MACH ± .5 DEG
ONE PLACE DECIMAL ± .040
TWO PLACE DECIMAL ± .030
THREE PLACE DECIMAL ± .010
INTERPRET GEOMETRIC TOLERANCING PER: ANSI
MATERIAL
FINISH (UNLESS OTHERWISE NOTED)

	NAME	DATE
DRAWN	TRF	1/8/2020
CHECKED	TRF	1/8/2020
ENG APPR.	TRF	1/8/2020

PROPRIETARY AND CONFIDENTIAL
THE INFORMATION CONTAINED IN THIS DRAWING IS THE SOLE PROPERTY OF RO-FLO COMPRESSORS LLC. ANY REPRODUCTION IN PART OR AS A WHOLE WITHOUT THE WRITTEN PERMISSION OF RO-FLO COMPRESSORS, LLC IS PROHIBITED.

Ro-Flo COMPRESSORS

TITLE: GENERAL ARRANGEMENT, 11L,CCW,DBS

SIZE: E | PART NO.: 16-123-633-427 | REV: 08

SCALE: 1:5 | WEIGHT: 2050 LBS. | SHEET: 1 OF 1

E 16-123-633-427 08