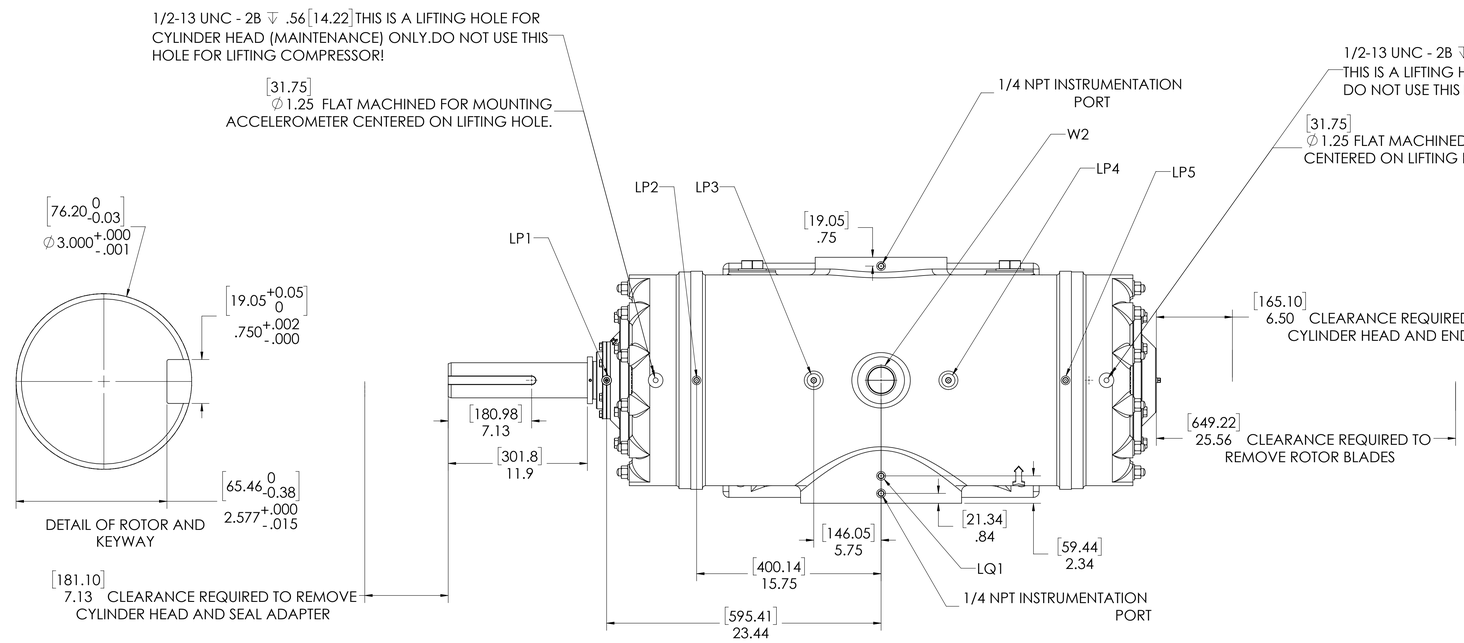

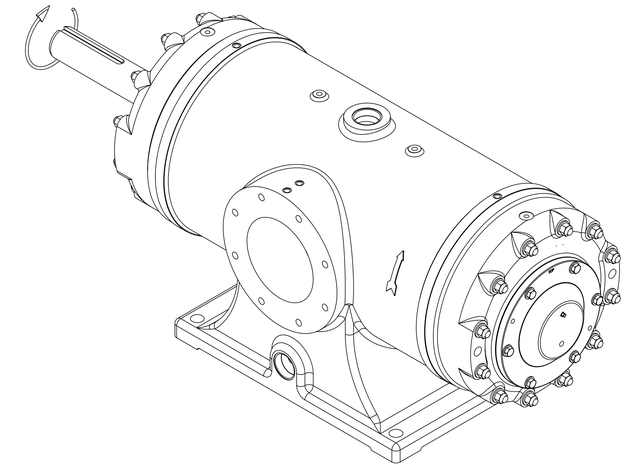

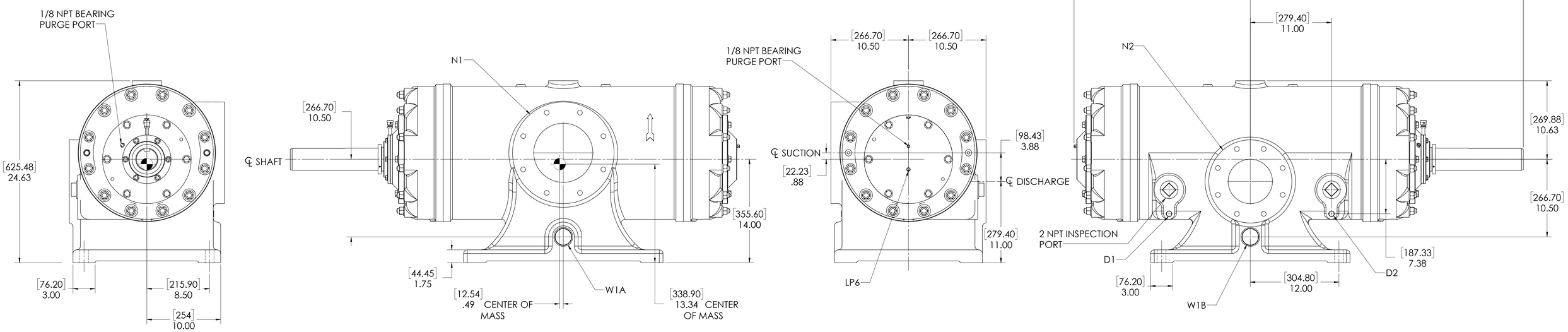

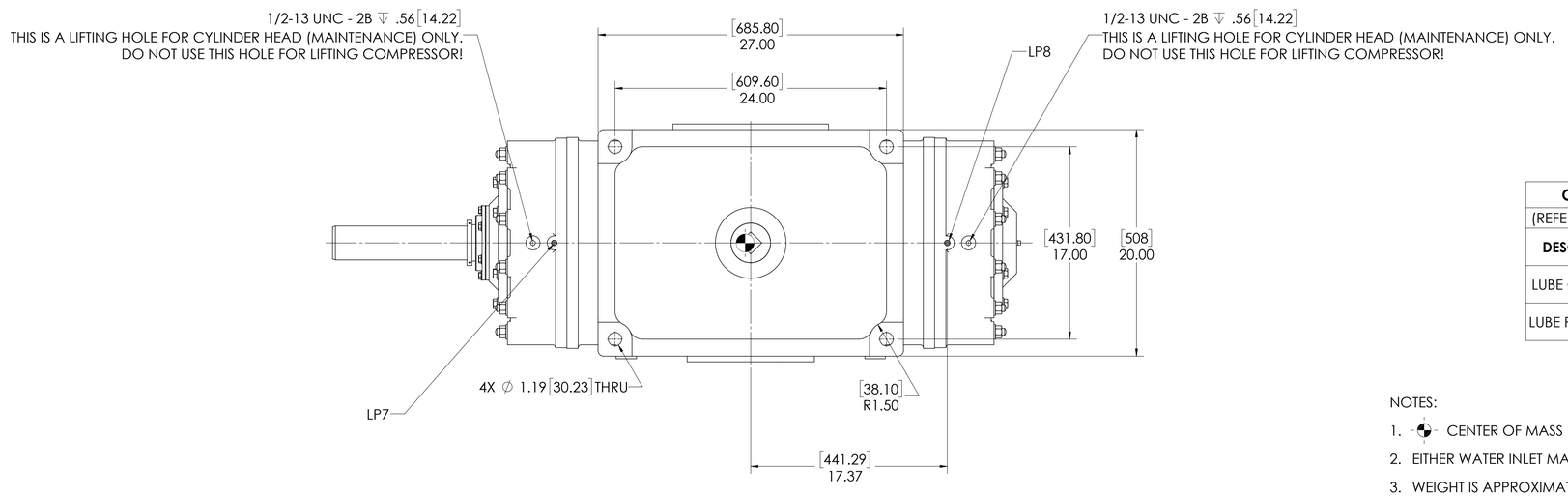

NOZZLE CONNECTIONS		BOLT HOLE SIZE
N1	8" GAS SUCTION FLANGE (ANSI CLASS 150 FLAT FACE)	8 x 3/4-10↧1.25
N2	6" GAS DISCHARGE FLANGE (ANSI CLASS 150 FLAT FACE)	8 x 3/4-10↧1.25
W1A	2 NPT(F) WATER INLET (SEE NOTE 2)	N/A
W1B	2 NPT(F) WATER INLET (SEE NOTE 2)	N/A
W2	2 NPT(F) WATER OUTLET	N/A
D1	1/2 NPT DRAIN HOLE	N/A
D2	1/2 NPT DRAIN HOLE	N/A

OIL CONNECTION POINTS SUMMARY

(REFER TO MANUAL FOR FURTHER INFORMATION)

DESCRIPTION	THREAD SIZE	QTY
LUBE QUILL(LQx)	1/4 NPT (F)	1
LUBE POINTS(LPx)	1/4 NPT (F)	8

NOTES:

1. -✪- CENTER OF MASS DIMENSIONS ARE APPROXIMATE
2. EITHER WATER INLET MAY BE USED, DEPENDING UPON SYSTEM NEEDS
3. WEIGHT IS APPROXIMATE
4. THIS DRAWING IS DUAL DIMENSION. DIMENSIONS WITHOUT BRACKETS ARE IN INCHES, DIMENSIONS IN [BRACKETS] ARE IN MILLIMETERS.

UNLESS OTHERWISE SPECIFIED:
DIMENSIONS ARE IN INCHES
TOLERANCES:
ANGULAR: MACH ± .5 DEG
ONE PLACE DECIMAL ± .060
TWO PLACE DECIMAL ± .030
THREE PLACE DECIMAL ± .010
INTERPRET GEOMETRIC TOLERANCING PER: ANSI
MATERIAL
FINISH (UNLESS OTHERWISE NOTED)

	NAME	DATE
DRAWN	TRF	5/22/2018
CHECKED	TSS	5/22/2018
ENG APPR.	BTS	5/22/2018

PROPRIETARY AND CONFIDENTIAL
THE INFORMATION CONTAINED IN THIS DRAWING IS THE SOLE PROPERTY OF RO-FLO COMPRESSORS,LLC. ANY REPRODUCTION IN PART OR AS A WHOLE WITHOUT THE WRITTEN PERMISSION OF RO-FLO COMPRESSORS, LLC IS PROHIBITED.

Ro-Flo Compressors, LLC

TITLE: GENERAL ARRANGEMENT, 12S,SF,CCW

SIZE: E | PART NO. 16-123-633-528 | REV 02

SCALE: 1:5 | WEIGHT: 2250 LBS | SHEET 1 OF 1

E 16-123-633-528 REV 02