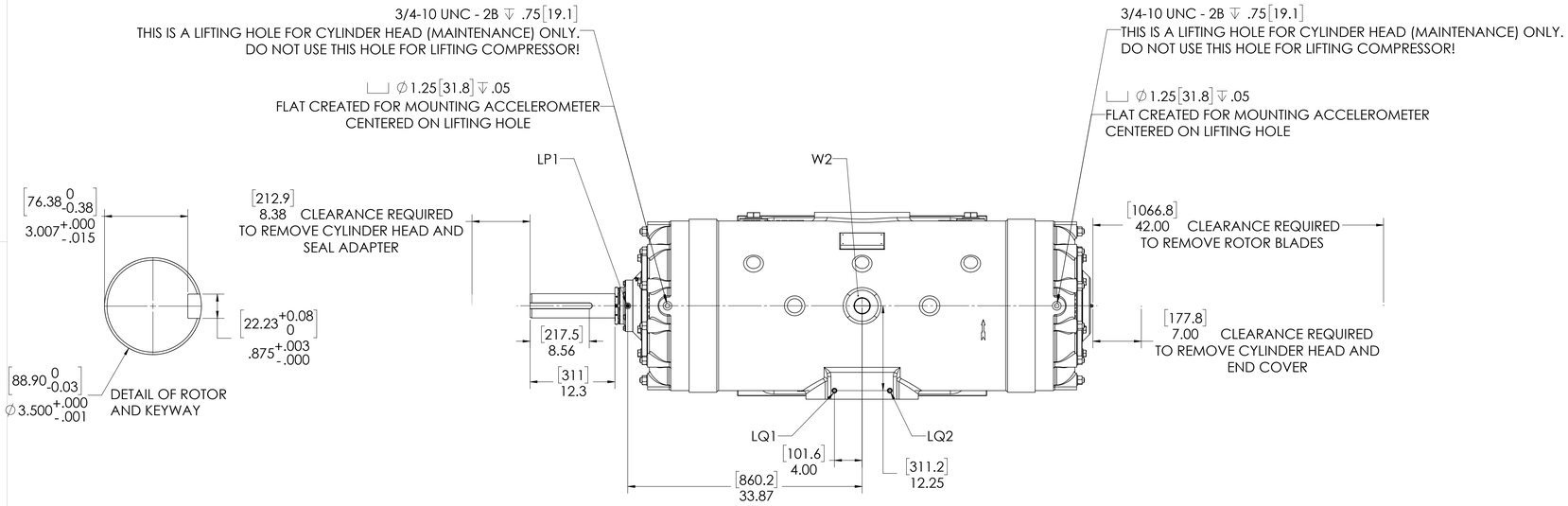

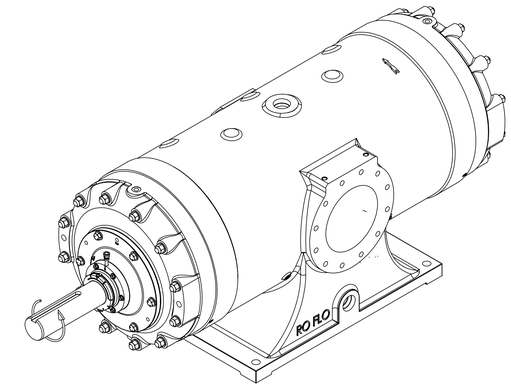

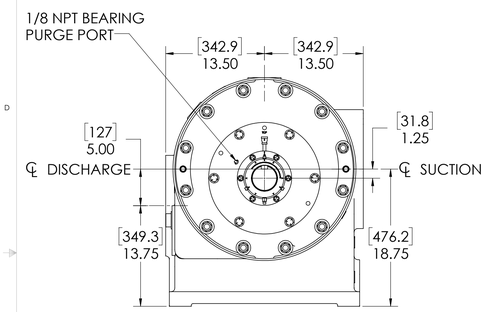

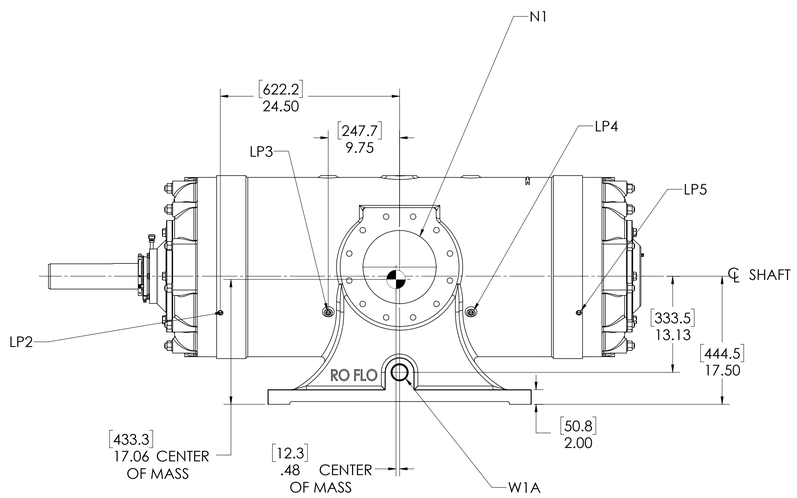

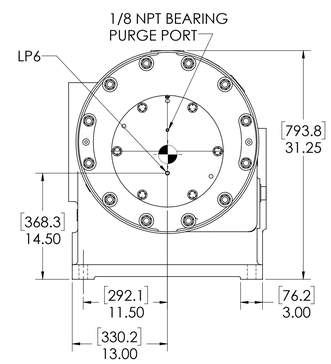

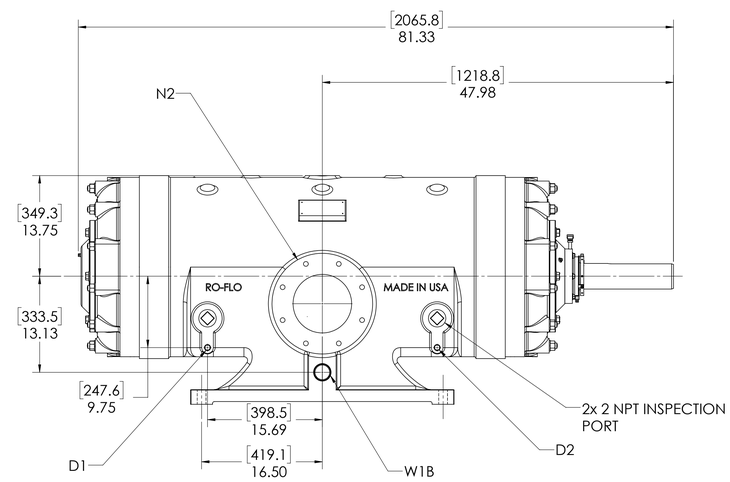

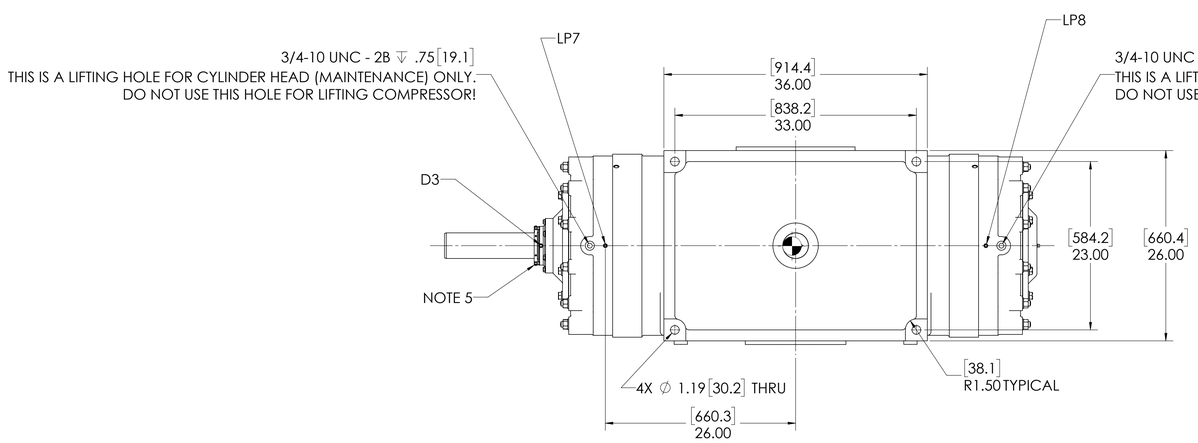

OIL CONNECTION POINTS SUMMARY		
(REFER TO MANUAL FOR FURTHER INFORMATION)		
DESCRIPTION	**THREAD SIZE**	**QTY**
LUBE QUILL(LQx)	1/4 NPT (F)	2
LUBE POINTS(LPx)	1/4 NPT (F)	8

	NOZZLE CONNECTIONS	BOLT HOLE SIZE
N1	10" GAS SUCTION FLANGE (ANSI CLASS 150 FLAT FACE)	12 x 7/8-9 ↧ 1.38
N2	8" GAS DISCHARGE FLANGE (ANSI CLASS 150 FLAT FACE)	8 x 3/4-10 ↧ 1.12
W1A	2 NPT(F) WATER INLET (SEE NOTE 2)	N/A
W1B	2 NPT(F) WATER INLET (SEE NOTE 2)	N/A
W2	2 NPT(F) WATER OUTLET	N/A
D1	1/2 NPT(F) DRAIN HOLE	N/A
D2	1/2 NPT(F) DRAIN HOLE	N/A
D3	1/8 NPT(F) SEAL WEEPAGE DRAIN	N/A

NOTES:

1. ⊕ CENTER OF MASS DIMENSIONS ARE APPROXIMATE
2. EITHER WATER INLET MAY BE USED, DEPENDING UPON SYSTEM NEEDS
3. WEIGHT IS APPROXIMATE
4. THIS DRAWING IS DUAL DIMENSION. DIMENSIONS WITHOUT BRACKETS ARE IN INCHES, DIMENSIONS IN [BRACKETS] ARE IN MILLIMETERS.
5. REMOVE (3) RED SEAL LOCKING TABS BEFORE OPERATION. RETAIN TABS AND SCREWS FOR SERVICE (TABS MUST BE INSTALLED BEFORE SEAL REMOVAL).

UNLESS OTHERWISE SPECIFIED:
DIMENSIONS ARE IN INCHES
TOLERANCES:
ANGULAR: MACH ± 0 DEG
ONE PLACE DECIMAL ±.060
TWO PLACE DECIMAL ±.030
THREE PLACE DECIMAL ±.010
INTERPRET GEOMETRIC TOLERANCING PER: ANSI
MATERIAL
FINISH(UNLESS OTHERWISE NOTED)

	NAME	DATE
DRAWN	TRF	4/24/2023
CHECKED	TSS	4/24/2023
ENG APPR.	BTS	4/24/2023

PROPRIETARY AND CONFIDENTIAL
THE INFORMATION CONTAINED IN THIS DRAWING IS THE SOLE PROPERTY OF RO-FLO COMPRESSORS LLC. ANY REPRODUCTION IN PART OR AS A WHOLE WITHOUT THE WRITTEN PERMISSION OF RO-FLO COMPRESSORS, LLC IS PROHIBITED.

Ro-Flo COMPRESSORS

TITLE: GENERAL ARRANGEMENT, 19L, SC, CCW

SIZE: E | PART NO.: 16-123-634-546 | REV.: 00

SCALE: 1:8 | WEIGHT: 5600 LBS | SHEET: 1 OF 1