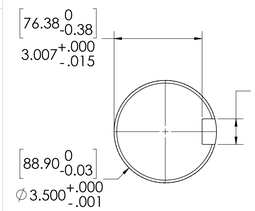

DETAIL OF ROTOR AND KEYWAY
(BOTH SHAFT ENDS)

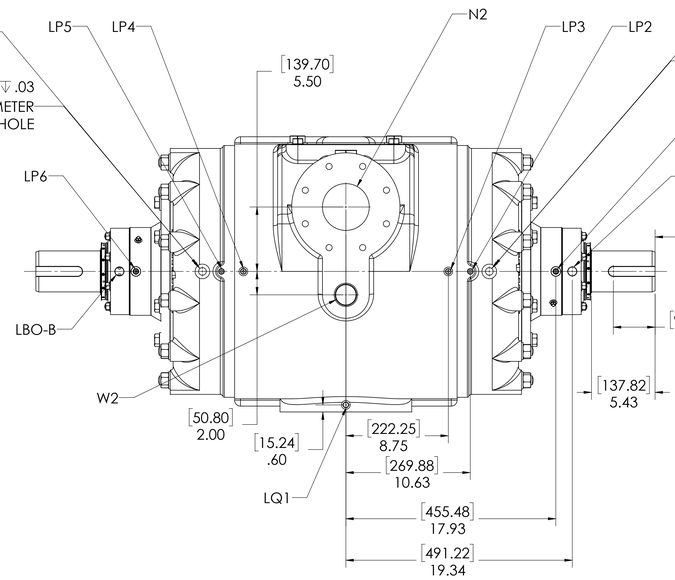

3/4-10 UNC - 2B ↧ .75 [19.05]
THIS IS A LIFTING HOLE FOR CYLINDER HEAD (MAINTENANCE) ONLY.
DO NOT USE THIS HOLE FOR LIFTING COMPRESSOR!

⌴ ∅1.25 [31.75] ↧ .03
FLAT CREATED FOR MOUNTING ACCELEROMETER
CENTERED ON LIFTING HOLE

[234.95]
9.25 CLEARANCE REQUIRED TO REMOVE CYLINDER HEAD WITH SEAL ADAPTER, AND ROTOR BLADES

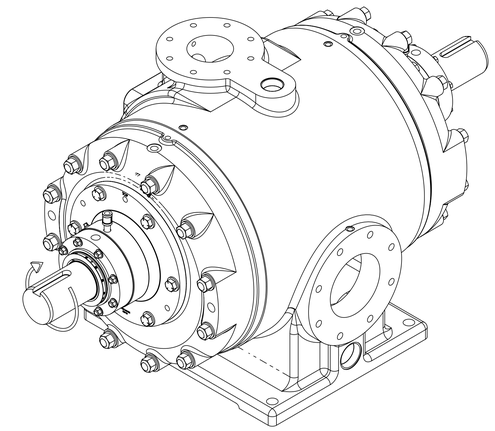

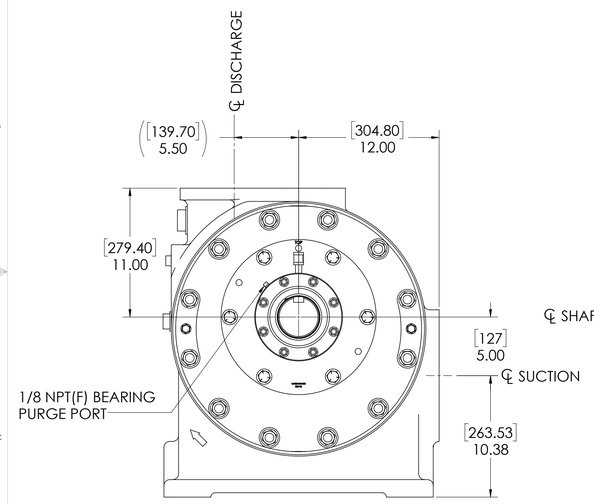

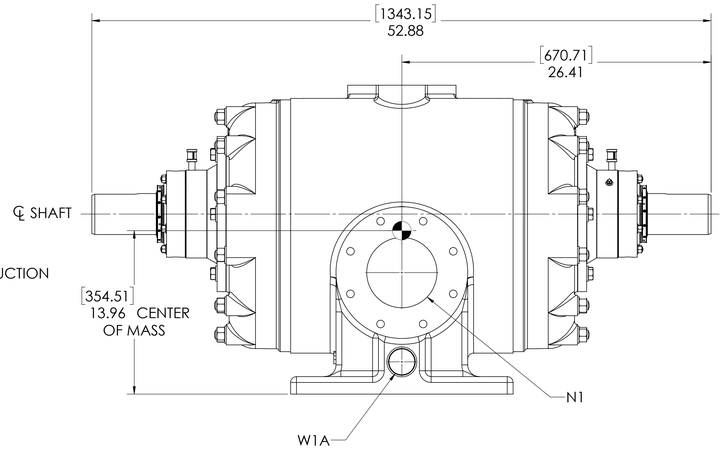

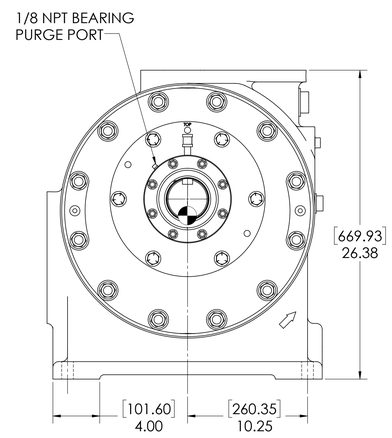

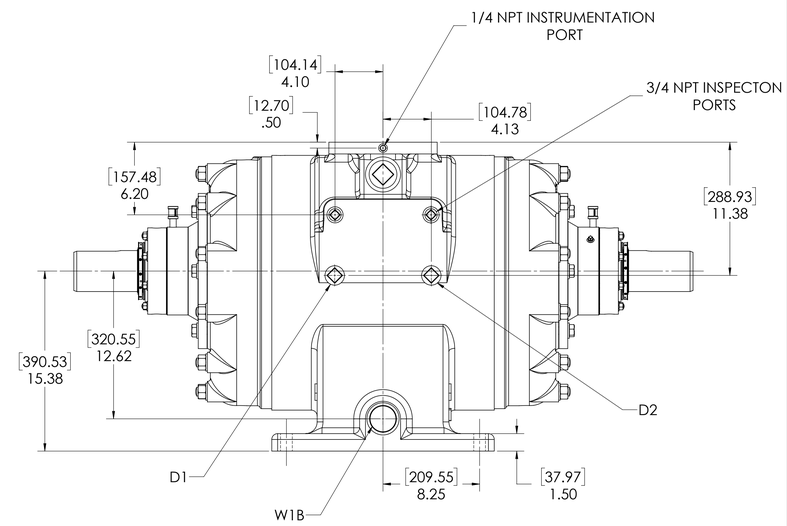

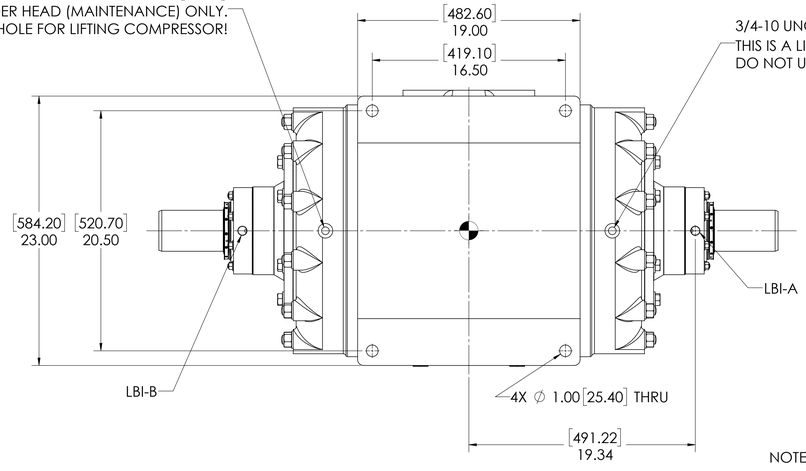

3/4-10 UNC - 2B ↧ .75 [19.05]
THIS IS A LIFTING HOLE FOR CYLINDER HEAD (MAINTENANCE) ONLY.
DO NOT USE THIS HOLE FOR LIFTING COMPRESSOR!

OIL CONNECTION POINTS SUMMARY		
(REFER TO MANUAL FOR FURTHER INFORMATION)		
DESCRIPTION	**THREAD SIZE**	**QTY**
LUBE QUILL(LQx)	1/4 NPT (F)	1
LUBE POINTS(LPx)	1/4 NPT (F)	6
SEAL SUPPLY (LBI-A, LBI-B)	1/2 NPT-(F)	2
SEAL RETURN (LBO-A, LBO-B)	1/2 NPT-(F)	2

NOZZLE CONNECTIONS		BOLT HOLE SIZE
N1	6" GAS SUCTION FLANGE (ANSI CLASS 150 FLAT FACE)	8 x 3/4-10 ↧ 1.20
N2	4" GAS DISCHARGE FLANGE (ANSI CLASS 150 FLAT FACE)	8 x 5/8-11 ↧ 1.00
W1A	2 NPT(F) WATER INLET (SEE NOTE 2)	N/A
W1B	2 NPT(F) WATER INLET (SEE NOTE 2)	N/A
W2	1-1/2 NPT(F) WATER OUTLET	N/A
D1	1-1/4 NPT(F) DRAIN HOLE	N/A
D2	1-1/4 NPT(F) DRAIN HOLE	N/A

NOTES:

1. ⊕ CENTER OF MASS DIMENSIONS ARE APPROXIMATE
2. EITHER WATER INLET MAY BE USED, DEPENDING UPON SYSTEM NEEDS
3. WEIGHT IS APPROXIMATE
4. DRAWING IS DUAL DIMENSION. DIMENSIONS WITHOUT BRACKETS ARE IN INCHES, DIMENSIONS IN [BRACKETS] ARE IN MILLIMETERS.

UNLESS OTHERWISE SPECIFIED:
DIMENSIONS ARE IN INCHES
TOLERANCES:
ANGULAR: MACH ± .5 DEG
ONE PLACE DECIMAL ± .060
TWO PLACE DECIMAL ± .030
THREE PLACE DECIMAL ± .015
INTERPRET GEOMETRIC TOLERANCING PER: ANSI
MATERIAL
FINISH (UNLESS OTHERWISE NOTED)

	NAME	DATE
DRAWN	TRF	9/6/2017
CHECKED	TSS	9/6/2017
ENG APPR	BTS	9/6/2017

PROPRIETARY AND CONFIDENTIAL
THE INFORMATION CONTAINED IN THIS DRAWING IS THE SOLE PROPERTY OF RO-FLO COMPRESSORS, LLC. ANY REPRODUCTION IN PART OR AS A WHOLE WITHOUT THE WRITTEN PERMISSION OF RO-FLO COMPRESSORS, LLC. IS PROHIBITED.

Ro-Flo Compressors, LLC

TITLE: GENERAL ARRANGEMENT, HP17, CARTRIDGE-DOUBLE EXTENSION

SIZE E | PART NO. 16-123-618-767 | REV 00

SCALE: 1:5 | WEIGHT: 2200 LBS. | SHEET: 1 OF 1

E 16-123-618-767 REV 00